INSTALLATION

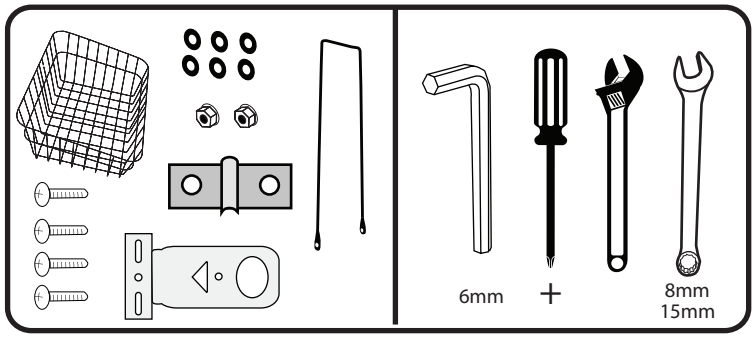

1

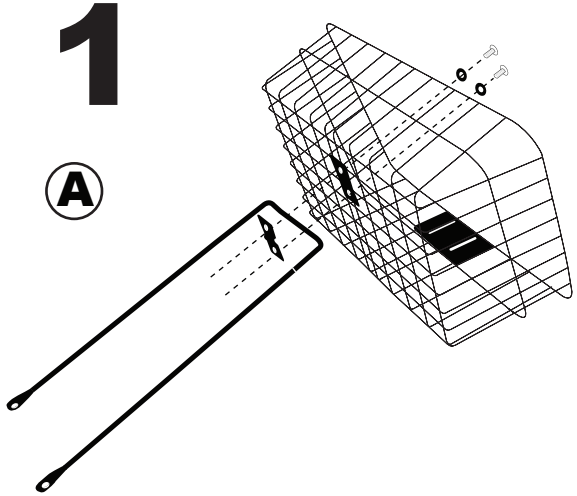

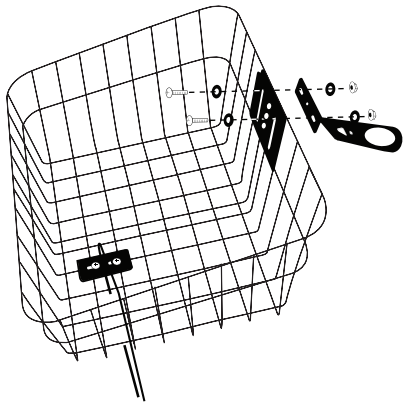

2

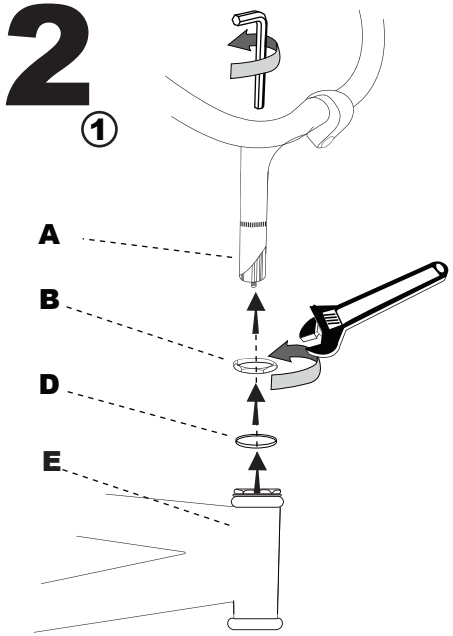

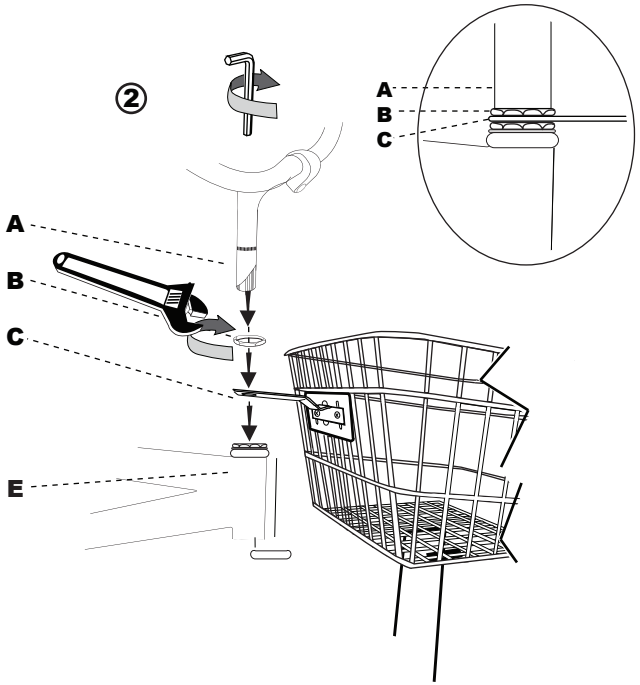

3

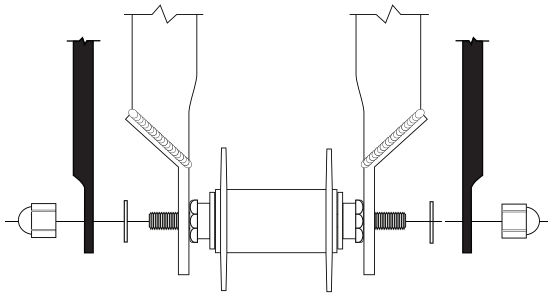

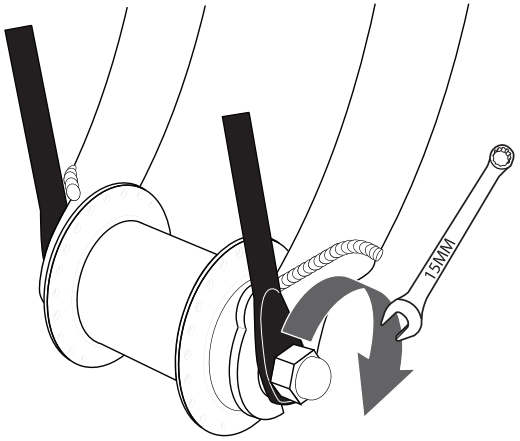

nirve SPORTS, LTD.

www.nirve.com

© 2008 Nirve Sports, Ltd. All rights reserved.